User's Manual

2-CH, 20 MS/s Digitizer Module

WE7116

YOKOGAWA ◆
Yokogawa Electric Corporation

IM 707116-01E
1st Edition

Thank you for purchasing the WE7116 2-CH, 20 MS/s Digitizer Module for the PC-Based Measurement Instruments, WE7000.
This user's manual contains useful information about the function, connection to the measuring station, operations of the software on the PC, and troubleshooting of the WE7116. This manual assumes that you will be using the WE7000 Control Software that is included with the measuring station.
The manual listed below contains general information about the WE7000 (primarily describes the operations of the measuring station, the optical interface module, the optical interface card, and the WE7000 Control Software) and is included with the measuring station.

Manual Title	Manual No.
WE7000 User's Manual	IM 707001-01E

To ensure correct use, please read this manual thoroughly before beginning operation. After reading the manual, keep it in a convenient location for quick reference whenever a question arises during operation.

Notes

- **The contents of this manual describe WE7000 Control Software Ver. 4.4.0.0 and module software Ver. 3.02. The operating procedures and screen contents described in this manual may differ from those in other versions of the software.**
- The contents of this manual are subject to change without prior notice as a result of continuing improvements to the instrument's performance and functions.
- Every effort has been made in the preparation of this manual to ensure the accuracy of its contents. However, should you have any questions or find any errors, please contact your nearest YOKOGAWA dealer as listed on the back cover of this manual.
- Copying or reproducing all or any part of the contents of this manual without the permission of Yokogawa Electric Corporation is strictly prohibited.

Trademarks

- Windows is either a registered trademark or a trademark of Microsoft Corporation in the United States and/or other countries.
- IBM is a registered trademark of International Business Machines Corporation.
- Adobe and Acrobat are trademarks of Adobe Systems incorporated.
- All other company and product names used in this manual are trademarks or registered trademarks of their respective companies.

Revisions

1st Edition: August 2002

Disk No. WE16
1st Edition: August 2002 (YK)
All Rights Reserved, Copyright © 2002 Yokogawa Electric Corporation

Checking the Contents of the Package

Unpack the box and check the contents before operating the instrument. If some of the contents are not correct or missing or if there is physical damage, contact the dealer from which you purchased them.

Measurement Module

Check that the model name given on the name plate matches those on the order.

MODEL

Model	Description
707116	WE7116 2-CH, 20 MS/s Digitizer Module

NO. (Instrument Number)

When contacting the dealer from which you purchased the instrument, please give them these numbers.

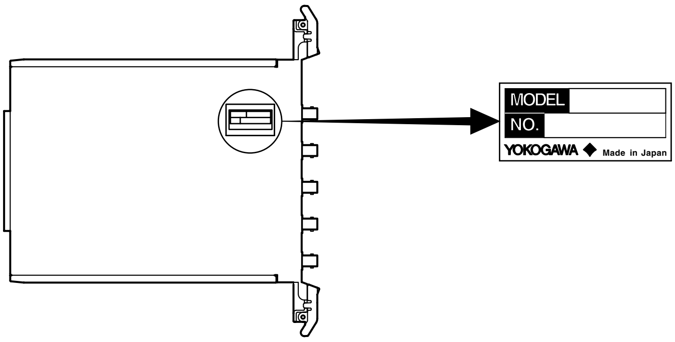

Standard Accessories

The standard accessories below are supplied with the instrument. Check that all contents are present and that they are undamaged.

User's manual (this manual) 1 piece
IM 707116-01E

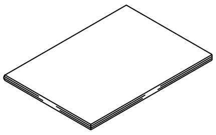

Optional Accessories (Sold Separately)

Name	Model	Description
400 MHz passive probe	700988	Input resistance: 10 MΩ, overall length: 1.5 m
Mini clip Converter	B9852CR	
BNC adapter	B9852CS	
Earth lead	B9852CT	
50-Ω terminator	700976	

How to Use This Manual

Structure of the Manual

This user's manual consists of the following sections.

Chapter	Title	Description
1	Explanation of Functions	Explains the system configuration and functions.
2	Hardware Preparation	Explains how to install the module into the measuring station and how to connect the input.
3	Troubleshooting and Maintenance	Explains the procedures for troubleshooting and self testing.
4	Specifications	Explains the specifications of the module.
Index		Index of contents.

Conventions Used in This Manual

Unit

k ..... Denotes 1000. Example: 100 kHz
K ..... Denotes 1024. Example: 720 KB

Displayed Characters

Characters written in bold mainly refer to on-screen elements and hardware controls.

Safety Markings

The following markings are used in this manual.

⚠	Danger. Refer to correspond*ing location on the instrument.* This symbol appears on dangerous locations on the instrument which require special instructions for proper handling or use. The same symbol appears in the corresponding place in the manual to identify those instructions.
WARNING	Calls attention to actions or conditions that could cause serious injury or death to the user, and precautions that can be taken to prevent such occurrences.
CAUTION	Calls attentions to actions or conditions that could cause light injury to the user or damage to the instrument or user's data, and precautions that can be taken to prevent such occurrences.
Note	Calls attention to information that is important for proper operation of the instrument.

Contents

Checking the Contents of the Package 2
How to Use This Manual 3

Chapter 1 Explanation of Functions

1.1 System Configuration and Block Diagram 1-1
1.2 Operation Panel 1-2
1.3 Starting/Stopping Measurements and Setting Waveform Acquisition Conditions 1-3
1.4 Setting the Trigger 1-6
1.5 Automatic Save of Measured Data, File Format Conversion, and Other Settings 1-7
1.6 Names and Function of Sections 1-8

Chapter 2 Hardware Preparation

⚠ 2.1 Installing the Module into the Measuring Station 2-1
⚠ 2.2 Connecting the Input Cable 2-3
⚠ 2.3 Calibrating Probes (Phase Correction) 2-5

Chapter 3 Troubleshooting and Maintenance

3.1 Troubleshooting 3-1
3.2 Self Test 3-2
3.3 Maintenance 3-3

Chapter 4 Specification

4.1 Performance Specifications 4-1
4.2 Default Values (Factory Default Settings) 4-4
4.3 General Specifications 4-5
4.4 Dimensional Drawings 4-7

Index

1.1 System Configuration and Block Diagram

System Configuration

The following is an example in which the WE7116 2-CH, 20 MS/s Digitizer Module is installed into the measuring station and the measuring station is connected to the PC with the optical fiber cable.

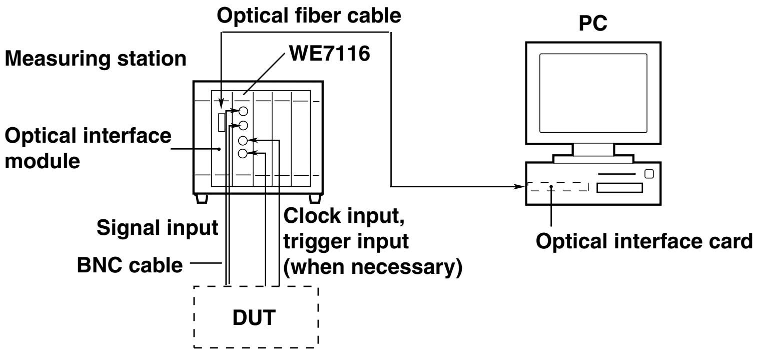
Optical fiber cable
PC
Measuring station
WE7116
Optical interface module
Signal input
BNC cable
Clock input, trigger input (when necessary)
Optical interface card
DUT

Block Diagram

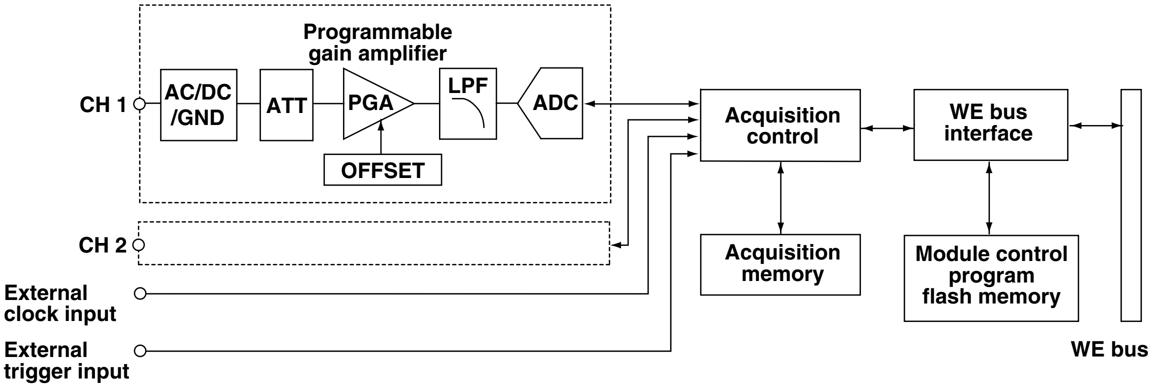
Programmable gain amplifier
CH 1
AC/DC /GND
ATT
PGA
LPF
ADC
OFFSET
Acquisition control
WE bus interface
CH 2
Acquisition memory
Module control program flash memory
External clock input
External trigger input
WE bus

Description of Operation

This module can measure non-isolated voltage signals with respect to the ground potential.

The signal applied to the input terminal of each channel (CH1 and CH2) passes through an AC/DC coupling circuit and an attenuator and enters the programmable gain amplifier. The voltage amplitude of each input signal is adjusted by the programmable amplifier. Then, the signal passes through the low-pass filter (LPF) and enters the A/D converter. At the A/D converter, the input signal is sampled by synchronizing to the clock signal provided by the time base, and converted to digital data. The digital data is then stored in the acquisition memory according to the sampling interval and the trigger condition settings.

The data in the acquisition memory can be read from the PC through the communication interface.

1.2 Operation Panel

The WE7000 Control Software that is installed in the PC is used to control the WE7116 2-CH, 20 MS/s Digitizer Module. The WE7000 Control Software displays operation panels similar to those shown in the figure below. This user's manual does not explain the operations of the operation panel or waveform monitor. For the operations of these items, see the on-line help that is provided with the WE7000 Control Software.

Starting/Stopping Measurements and Setting Waveform Acquisition Conditions

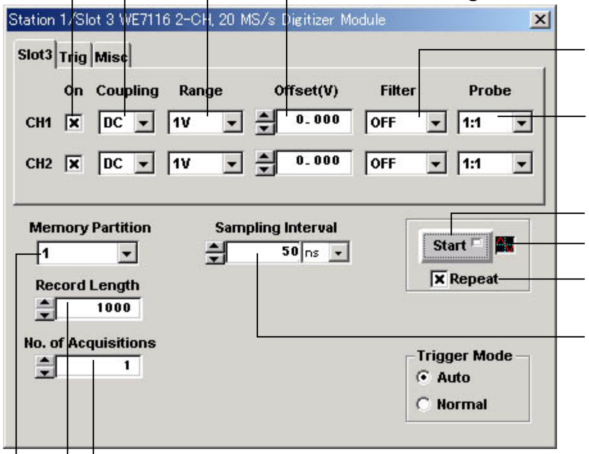

Station 1/Slot 3 WE7116 2-CH, 20 MS/s Digitizer Module

	On	Coupling	Range	Offset(V)	Filter	Probe
CH1	☒	DC	1V	0.000	OFF	1:1
CH2	☒	DC	1V	0.000	OFF	1:1

Memory Partition: 1
Sampling Interval: 50 ns
Record Length: 1000
No. of Acquisitions: 1
☒ Repeat
Trigger Mode: ● Auto ○ Normal

Turn measurement ON/OFF
Select the input coupling
Select the measurement range
Set the offset voltage
Set the input filter
Set the probe attenuation
Start/Stop measurement
Turn ON/OFF waveform monitor
Select the check box during continuous measurements
Set the sampling interval
Set the number of acquisitions (number of memory blocks used)
Set the record length
Select the number of memory partitions

Selecting the time base

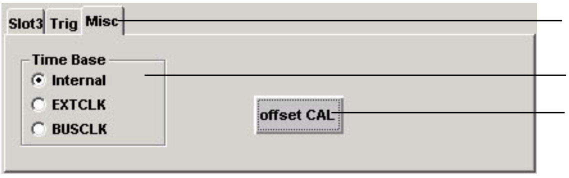

Time Base: ● Internal ○ EXTCLK ○ BUSCLK

Misc tab
Select the time base
Execute offset calibration

Setting the Trigger

Select the trigger type
Select the trigger source
Set the trigger level
Set the trigger level
Set the trigger hold off
Set the pretrigger

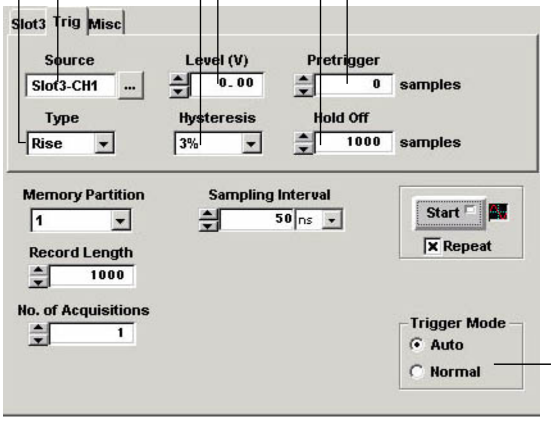

Source: Slot3-CH1
Type: Rise
Level (V): 0.00
Hysteresis: 3%
Pretrigger: 0 samples
Hold Off: 1000 samples
Memory Partition: 1
Sampling Interval: 50 ns
Record Length: 1000
No. of Acquisitions: 1
☒ Repeat
Trigger Mode: ● Auto ○ Normal

Select the trigger mode

Trig tab
Set the trigger level (upper limit)

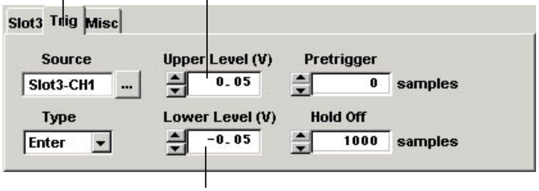

Source: Slot3-CH1
Type: Enter
Upper Level (V): 0.05
Lower Level (V): -0.05
Pretrigger: 0 samples
Hold Off: 1000 samples

Set the trigger level (lower limit)

1.3 Starting/Stopping Measurements and Setting Waveform Acquisition Conditions

Starting/Stopping Measurement

Click **Start**. The measurement values are acquired to the acquisition memory according to the specified trigger condition (see section 1.4). After acquiring the specified record length of data, the operation stops. In this mode, the acquisition memory can be partitioned and the measured values can be acquired to these individual memory blocks each time triggering occurs. If the Repeat check box* is selected, the operation repeats until the next time Start is clicked.

* The Repeat check box appears only when the number of memory partitions and acquisition count are both 1.

Turning ON/OFF the Measurement Channels

Measurement is made only on the channels that have the On check box selected.

Input Coupling

Select from the following:

AC

The input signal is coupled to the attenuator of the analog input circuit through a capacitor. Use this setting if you wish to observe just the amplitude of an AC signal (eliminating the DC components) or a signal relative to a given reference voltage.

DC

The input signal is directly coupled to the attenuator of the analog input circuit.
Use this setting if you wish to observe the entire input signal (DC component and AC component).

GND

Input signal is coupled to the ground not to the attenuator of the vertical control circuit.
This setting allows you to check the ground level on the waveform monitor.

Measurement Range

The following measurement ranges can be specified. The settings below are those when the probe attenuation is set to “1:1.” If the probe attenuation is 1:10 multiply these values by 10. If it is 100:1 multiply by 100. If it is 1000:1 multiply by 1000.

Setting	Measurable Range (Accuracy Guaranteed Measurement Range)	Display Range	DisplayResolution
100 mV	–0.1 to 0.1 V	–0.1000 to 0.1000 V	0.1 mV
200 mV	–0.2 to 0.2 V	–0.2000 to 0.2000 V	0.1 mV
500 mV	–0.5 to 0.5 V	–0.5000 to 0.5000 V	0.1 mV
1 V	–1 to 1 V	–1.000 to 1.000 V	1 mV
2 V	–2 to 2 V	–2.000 to 2.000 V	1 mV
5 V	–5 to 5 V	–5.000 to 5.000 V	1 mV
10 V	–10 to 10 V	–10.00 to 10.00 V	10 mV
20 V	–20 to 20 V	–20.00 to 20.00 V	10 mV
50 V	–50 to 50 V	–50.00 to 50.00 V	10 mV

Offset Voltage

If the input coupling is set to DC, you can cancel the specified offset voltage from the input signal. The ranges shown below are values when the probe attenuation is set to "1:1." If the probe attenuation is 1:10 multiply these values by 10. If it is 100:1 multiply by 100. If it is 1000:1 multiply by 1000.

Measurement Range	Selectable Range	Resolution
100 mV	–0.2 to 0.2 V	0.1 mV
200 mV	–0.4 to 0.4 V	0.2 mV
500 mV	–1 to 1 V	0.5 mV
1 V	–2 to 2 V	1 mV
2 V	–4 to 4 V	2 mV
5 V	–10 to 10 V	5 mV
10 V	–20 to 20 V	10 mV
20 V	–40 to 40 V	20 mV
50 V	–100 to 100 V	50 mV

Probe Attenuation

A probe can be used in connecting the circuit being measured to the measurement input terminal. Using the probe has the following advantages.

- Does not disturb the voltage and current of the circuit being measued.
- Inputs the signal with no distortion.
- Expands the voltage range that can be measured by the oscilloscope.

When using the probe, attenuation setting on the module must be set equal to the probe attenuation so that the measured voltage can be read directly.

This module has the following attenuation settings: 1:1, 10:1, 100:1, and 1000:1.

Sampling Interval

The selectable range is 50 ns to 1 ms (50-ns steps).

Memory Partition

You can divide the acquisition memory into multiple blocks and acquire the measured values to the memory blocks in order every time the trigger occurs. You can divide the memory into 1, 2, 4, 8, 16, 32, 64, 128, 256, 512, or 1024 partitions.

Record Length

Enter the value in the **Record Length** entry box. The selectable range is "2 to 4 M/the number of memory partitions." The record length is set to the "maximum record length" when "0" is specified.

No. of Acquisitions

Set the number of times to perform acquisitions. The selectable range is from "1 to the number of memory partitions."
After acquiring the number of acquisitions of data or if the acquisition is stopped, the waveform of the measured values is displayed. For example, if you set the number of acquisitions to 3, the module operates as follows.

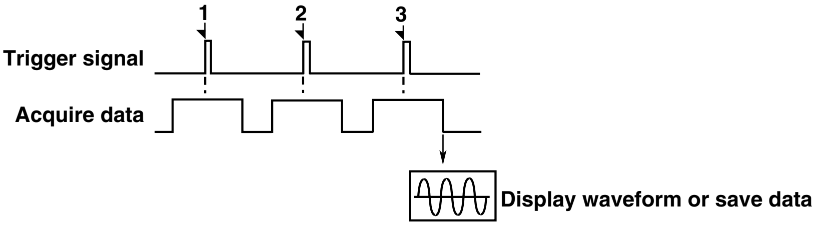

If you set a number less than the number of memory partitions, you will have to specify the number of memory blocks to use.

Time Base

Measured values can be sampled not only by using the clock signal generated within the module, but also by using clock signals from external sources or by signals generated by other modules. External clock signals are input through the external clock input terminal. Apply a continuous external input clock signal of 50-ns to 100-µs cycles.
Correct data cannot be acquired if the clock signal is outside this range.

Internal:	Internal clock
External:	EXT.CLOCK IN signal on the module's front panel
BUSCLK:	Input signal (CMNCLK) according to the trigger source/time base source/arming setting (see section 4.6, "Setting Trigger Source/Time Base Source/Arming" in the WE7000 User's Manual (IM707001-01E)).

Input Filter

You can set a low-pass filter used to eliminate high-frequency components from the input signal.
When applying the low-pass filter, select **500kHz** or **1MHz** from the **Filter** list box. Otherwise, select **OFF**.

offset CAL

Click **offset CAL** to correct the ground level offset. Perform calibration with the measurement stopped.

1.4 Setting the Trigger

Selecting the Trigger Source

Select the trigger source signal from the following:

SlotX-CHY (where X is the slot number and Y is the channel number):	Input signal (includes input signals from 2-CH, 20 MS/s Digitizer Modules that are linked)
BUSTRG:	Bus signal (BUSTRG1/BUSTRG2) of the WE bus
EXTTRG:	EXT.TRIG IN signal on the module's front panel
Line:	Commercial power signal used

Trigger Type and Trigger Slope (Trig Type)

When the trigger source is set to the input signal, you can select the trigger type from the following list of choices.

Rise/Fall/Both

With this setting, the trigger occurs when the input signal changes from below the trigger level to above the trigger level (Rise) or from above the trigger level to below the trigger level (Fall). You can have the trigger occur on the rise or fall or both.

Enter/Exit

With this setting, the trigger occurs when the input signal enters the range specified by trigger levels (upper level and lower level) or exits the range.

Selecting the Trigger Level and Hysteresis or Setting the Window Trigger Range (Upper Level/Lower Level)

You can set these items when the input signal is the trigger source. The procedure varies depending on the trigger type that is selected.

If the trigger type is set to Rise, Fall, or Both, you can select the trigger level and hysteresis. The selectable range of trigger levels is a voltage that is 5% to 95% of the full scale (range from the uppser limit to the lower limit of the measurement range). The resolution is 0.5% of the full scale. For hysteresis, select 3% or 10% of the measurement range. If the hysteresis is set to 3%, trigger occurs when the trigger input signal changes by an amount exceeding ±1.5% of the full scale with respect to the trigger level. Likewise, if the hysteresis is set to 10%, trigger occurs when the trigger input signal changes by an amount exceeding ±5% of the full scale.

If the trigger type is set to Enter or Exit, you can set the window trigger range. The selectable range of voltage is 5% to 95% of the full scale. The resolution is 0.5% of the full scale. Set two values, Lower Level and Upper Level, to specify the range. When the trigger input signal enters or exits the range, a trigger occurs.

Pretrigger

You can acquire the measured values before the trigger point into the acquisition memory. Set how many points before the trigger point to begin the acquisition in the range, "0 to specified record length – 2."

Trigger Hold Off

Select the trigger hold off period that is used to temporarily stop the detection of the next trigger once a trigger occurs. The hold off period can be set in the range of "the record length to 4,194,304" (data points).

Trigger Mode

Set the trigger operation condition. The following two trigger modes are available.

Auto mode (Auto)

The waveform display is updated when a trigger occurs while acquiring 4 M/the number of memory partitions of data. The waveform display is automatically updated if a trigger does not occur while acquiring 4 M/the number of memory partitions of data.

Normal mode

The waveform display is updated only when a trigger occurs. The waveform display is not updated if a trigger does not occur.

1.5 Automatic Save of Measured Data, File Format Conversion, and Other Settings

The following functions are functions of the WE7000 Control Software.
For the operations of these items, see the on-line help that is provided with the WE7000 Control Software.

Waveform Display

The waveform is displayed on the waveform monitor of the WE7000 Control Software.

Automatic Saving of Waveform Data

Besides saving the trend data displayed on the waveform monitor, you can also have the waveform values automatically saved using triggers.
The following two methods of automatically saving measured values using triggers are available.

- Cyclic
  You specify the number of files, and the data are saved in a cyclic pattern within the specified number of files until the measurement is stopped. The newest data are not the file with the largest file number, but the file to which the data were saved immediately before stopping the measurement.
- File number limit
  You specify the number of files, and the data are saved up to the specified number and then the operation stops.

Converting Waveform Values

Waveform values that are saved can be converted to ASCII data in CSV format (*.csv) or to a physical value in 32-bit floating point format (conforming to IEEE754-1985) (*.wvf).
The file conversion can also be performed on data saved with the Waveform Viewer or Monitor of the WE7000 Control Software.

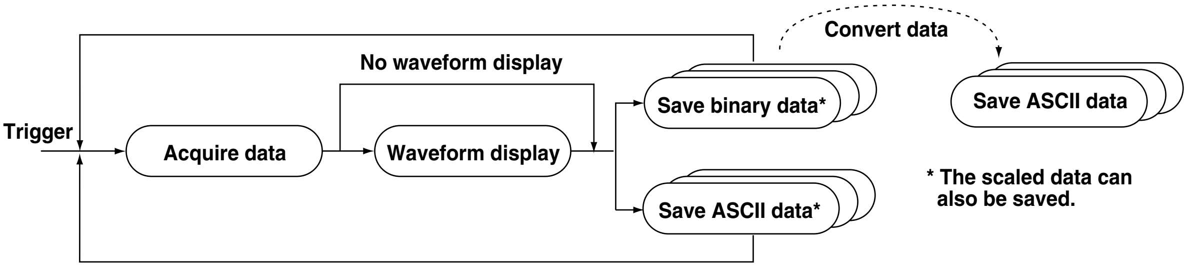
Convert data
No waveform display
Trigger
Acquire data
Waveform display
Save binary data*
Save ASCII data*
Save ASCII data
* The scaled data can also be saved.

Scaling Waveform Values

Set the measured values at any two points (VP1 and VP2) and their corresponding physical values (SP1 and SP2). The values at these four points define the scale converting equation (Y = ax + b). The measured values are converted to physical values according to this equation. The waveform can be displayed, or the measured values can be saved.

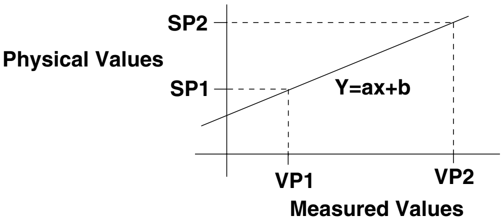
SP2
Physical Values
SP1
Y=ax+b
VP1
VP2
Measured Values

1.6 Names and Function of Sections

Front Panel

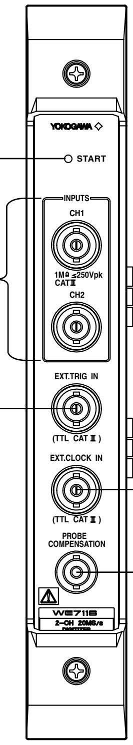
YOKOGAWA
START
INPUTS
CH1
1MΩ ≤250Vpk
CAT II
CH2
EXT.TRIG IN
(TTL CAT II)
EXT.CLOCK IN
(TTL CAT II)
PROBE
COMPENSATION
WE7116
2-CH 20MS/s
DIGITIZER

Sampling indicator
Turns ON when the input signal is sampled.

Input terminals
Equipped with two channels of BNC input terminals.

External trigger input terminal
Terminal used to input external trigger signals.

External clock input terminal
Terminal used to input external clock signals.

Probe compensation signal output terminal
Terminal used to output probe compensation signal.

2.1 Installing the Module into the Measuring Station

Preparing to Install the Module

The measuring station comes with each slot covered with a cover plate as shown in the figure below. Verify that the power supply is not connected to the measuring station, and then loosen the module attachment screws (2 locations) and remove the cover plate from the slot where the module is going to be installed. Please note that the slot on the left end is dedicated to the communication module and therefore this module cannot be installed there.

*The following figure shows an example of the measuring station WE400.

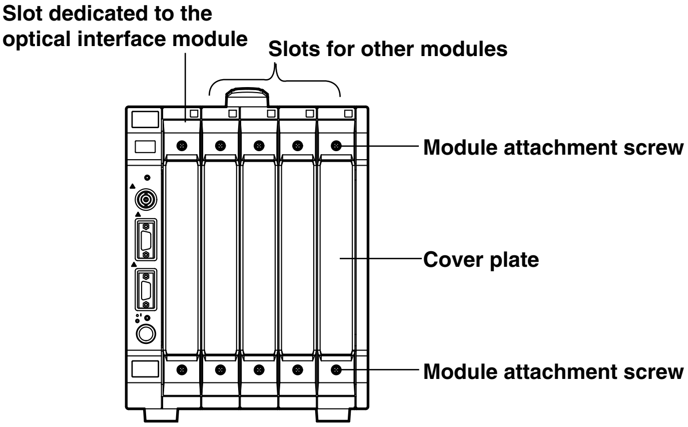

Installing the Digitizer Module

WARNING

- Make sure to fasten the top and bottom attachment screws. If you connect the input signal cable without fastening the attachment screws, the protective grounding of the measurement module provided by the power cord is compromised and may cause electric shock.

CAUTION

- To avoid damaging the instrument when installing modules, make sure to turn OFF the standby power switch of the measuring station.
- Be careful not to get your fingers caught in the ejection lever when inserting the module. In addition, do not put your hand inside the slot, because there are protrusions along the module guide that may injure your fingers.
- Do not remove the cover plates from unused slots. It can cause overheating and malfunction. The cover plates are also needed to minimize the influence of electromagnetic interference.

Insert the module along the guide rail of the slot from which you removed the cover plate. Insert the module until it clicks into the connector. Be careful not to get your fingers caught in the ejection lever while inserting the module. When the module is securely inserted, fasten the module attachment screws (tightening torque: 0.6 to 0.7 N-m).
To remove the module, loosen the module attachment screws and pull the ejection lever from the inside to the outside. This will force the module out of the slot.

<There is an illustration on the next page.>

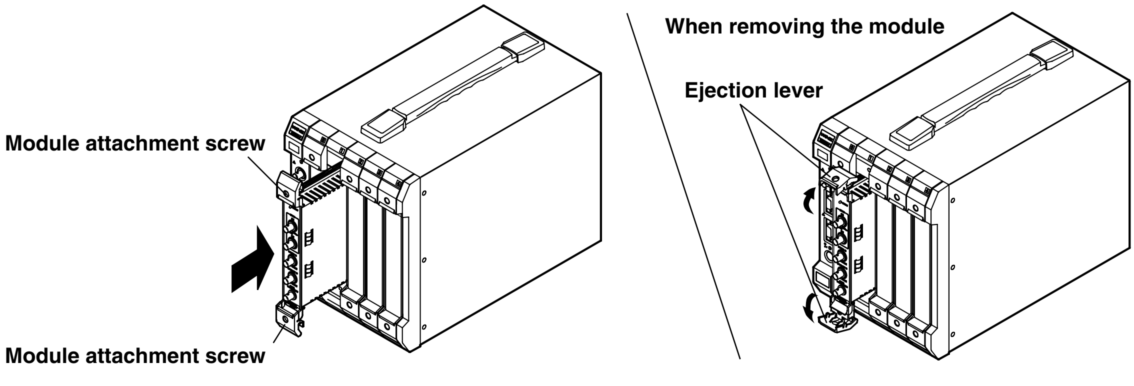
Module attachment screw
Module attachment screw
When removing the module
Ejection lever

Note

When synchronizing digitizer modules for measurement (module linking), install the multiple digitizer modules in adjacent slots.

2.2 Connecting the Input Cable

Connecting the Analog Signal Input Cable

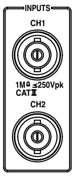

A BNC cable is used to input the analog signal to be measured. Connect the BNC cable to the input terminal (BNC terminal indicated as CH1 or CH2) on the front panel of the module.The input impedance is approximately 1 MΩ.

CAUTION

- The maximum input voltage is 250 V (DC + ACpeak) when the frequency is 1 kHz or less. Applying a voltage exceeding this maximum can damage the input section. If the frequency is above 1 kHz, the input section may be damaged even when the voltage is below this value.

Connecting the External Clock Input Cable

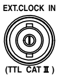

To use an external signal instead of the internal clock signal to sample the input signal, connect an external clock input cable to the external clock input terminal (BNC terminal indicated as EXT.CLOCK IN) on the front panel of the module.
When synchronizing multiple modules, apply the external clock to the left-most digitizer module.

CAUTION

- Applying a voltage outside the allowable input range can damage the input section.

The clock signal should conform to the following specifications.

Item	Specification
Input format	Non-isolated, unbalanced (TTL)
Allowable input voltage range	–3 V to +8 V (Overvoltage Category CAT I and II)
Input H level	2.2 V min
Input L level	0.5 V max
Input resistance	10 kΩ (typical value*)
Input frequency	10 kHz to 20 MHz (continuous clock only)
Input pulse width	20 ns or more for both H and L

* The typical value is a representative or standard value. It is not a warranted value.

Connecting the External Trigger Input Cable

EXT.TRIG IN
(TTL CAT II)

To use an external signal instead of the internal trigger signal to activate triggers, connect an external trigger input cable to the external trigger input terminal (BNC terminal indicated as EXT.TRIG IN) on the front panel of the module.

When synchronizing multiple modules, apply the external trigger to the left-most digitizer module.

CAUTION

- Applying a voltage outside the allowable input range can damage the input section.

The trigger signal should conform to the following specifications.

Item	Specification
Input format	Non-isolated, unbalanced (TTL)
Allowable input voltage range	–3 V to +8 V (Overvoltage Category CAT I and II)
Input H level	2.2 V min
Input L level	0.5 V max
Input resistance	10 kΩ (typical value*)
Maximum input frequency	8 MHz
Input pulse width	20 ns or more for both H and L

* The typical value is a representative or standard value. It is not a warranted value.

2.3 Calibrating Probes (Phase Correction)

Necessity of Phase Correction of the Probe

If the input capacity of the probe is not within the adequate range, the gain across different frequencies will not be uniform. Consequently, waveforms cannot be displayed correctly. However, the input capacitance of each probe is not constant. Therefore, the probes have a variable capacitor (trimmer) that needs to be adjusted. This adjustment is called phase correction.

When using the probe for the first time, make sure to perform phase correction.

In addition, the input capacitance is different for each input terminal. Thus, phase correction must be performed also when the input terminal to which the probe is to be connected is changed.

Procedure

CAUTION

- Do not apply external voltage to the probe compensation signal output terminal. This may cause damage to the internal circuitry.

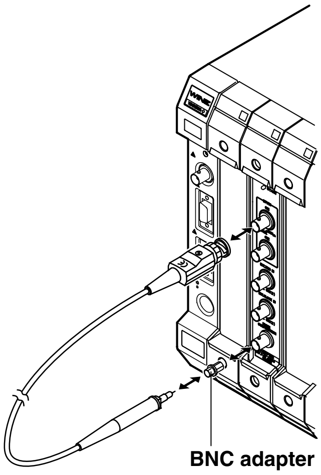

Carry out the following procedure to perform phase correction.

1. Turn ON the main power switch and standby power switch of the measuring station.
2. Connect the probe to the measurement input terminal (the terminal to which the signal to be measured is to be input).
3. Connect a BNC adapter (part number: B9852CS, sold separately) to the probe compensation signal output terminal (BNC terminal indicated as PROBE COMPENSATION).
4. Connect the end of the probe to the BNC adapter for probes.
5. Start the WE7000 Control Software and double-click the digitizer module icon in the station list window to open the operation panel.
6. Click **Start**.
   The Waveform Monitor starts and the probe compensation signal waveform appears. Change the voltage range and sampling frequency to facilitate the adjustment operation.
7. Insert a flat-head screwdriver to the phase correction hole of the probe and turn the variable capacitor to make the displayed waveform a correct rectangular wave.

Probe Compensation Signal

The probe compensation signal output terminal outputs the following rectangular wave signal.

Frequency: Approx. 1 kHz

Amplitude: Approx. 1 V

Differences in the waveform due to the phase correction of the probe

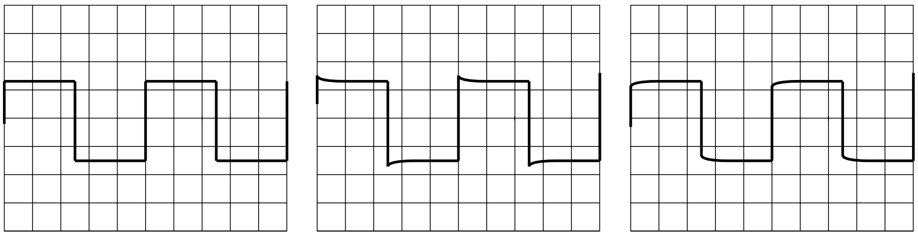

Correct waveform

Over compensated (the gain in the high frequency region is up)

Under compensated (the gain in the high frequency region is low)

3.1 Troubleshooting

- If servicing is necessary, or if the module is not operating correctly after performing the following corrective actions, contact your nearest YOKOGAWA dealer as listed on the back cover of this manual.
- To verify that the module is operating correctly, perform the self test as described on the next page.

Description	Probable Cause/Corrective Action	Reference Page
Module does not operate.	Check to see that the module is installed correctly into the station. Also, install the module into another slot, and check whether it will operate there. If it operates in the other slot, the measuring station is likely to have malfunctioned. If the module is installed correctly and does not operate, the connector might be bad or the IC may have malfunctioned. In either case, contact your nearest YOKOGAWA dealer to have it repaired.	2-1, *
Waveform data cannot be acquired.	Check to see that the input cables are connected properly to the BNC terminals.	2-3, 2-4
Noise enters the input signal.	If the signal line and the AC power supply line are close to each other, move them apart. Also make sure that the signal line is away from the noise source. Change to a shielded signal cable if you are not already using one.	–
	If the frequency of the input signal is known, remove the frequency region above the frequency component of the input signal by using a filter.	1-4
Measured values are not correct.	Check whether the ambient temperature and humidity are within the allowed ranges. If you did not allow a warm-up time of 30 minutes, try measuring again after the warm-up time has passed.	4-5
Trigger does not activate	Check whether the trigger setting is adequate for the input source in the trigger operation panel.	1-2, 1-6
	If you are using the bus trigger signal, verify that the settings are correct in the trigger source/time base source/arming setting dialog box of the WE7000 Control Software.	*
The waveform monitor does not appear.	Check to see that the waveform monitor ON/OFF button, located to the right of the Start button of the operation, is not set to OFF.	1-2

* See the WE7000 User's Manual (IM 707001-01E).

3.2 Self Test

If you believe that the module is not operating correctly, perform the self test according to the following procedure with nothing connected to the input terminals of the module being testing and the external trigger input terminal/external I/O connector of the measuring station.

Executing Self Test

1. Select **Self Test** from the **System** menu of the WE7000 Control Software.

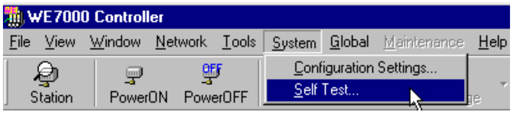
WE7000 Controller
File
View
Window
Network
Tools
System
Global
Maintenance
Help
Station
PowerON
PowerOFF
Configuration Settings...
Self Test...

2. In the Self Test dialog box that appears, select the station name and enter the slot number corresponding to the module, and click **Execute**.
   "Executing..." is displayed in the Result display box.

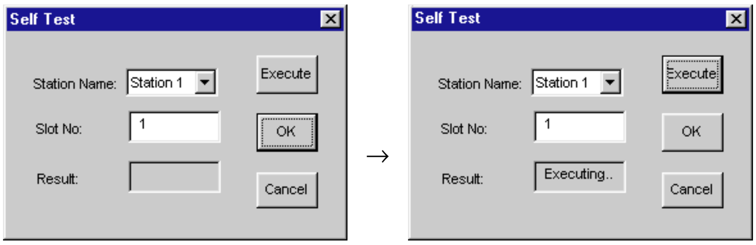
Self Test
Execute
OK
Cancel
→
Self Test
Execute
OK
Cancel

Station Name: Station 1
Slot No: 1
Result:

Station Name: Station 1
Slot No: 1
Result: Executing..

Verifying Test Results

If a value other than "0" is displayed in the Result display box of the Self Test dialog box, the module is probably malfunctioning. Please contact your nearest YOKOGAWA dealer as listed on the back cover of this manual for repairs.

3.3 Maintenance

Maintenance of Parts

There are no parts in this module that require periodic replacement.

Calibration

We recommend that you calibrate the measurement module once a year to assure its measurement accuracy.

Please contact your nearest YOKOGAWA dealer to have the module calibrated.

4.1 Performance Specifications

Number of Input Channels

2

Input Format

Non-isolated unbalanced input

Connector Type

BNC

Input Coupling

DC/AC/GND

A/D Resolution

Equivalent to 12 bits (including the sign)

Measurement Range

±100 mV to ±50 V (1-2-5 steps)

Input Impedance

Approx. 1 MΩ/Approx. 28 pF

Allowable Signal Resistance

100 Ω or less

Frequency Characteristics (–3 dB point, when filter is OFF)

During DC coupling: DC to 8 MHz (typical value[*1])

During AC coupling: 5 Hz to 8 MHz (typical value[*1])

DC Accuracy (value measured at an ambient temperature of 23 ± 5°C, ambient humidity of 50 ± 10% RH, offset voltage setting of 0 V, after performing offset calibration after the warm-up time has passed, with time base set to internal clock)

±0.75% of Full Scale[*2]

Input Filter

Low-pass filter

Characteristics: 5th order elliptic (1.4f_{CUTOFF}–24 dB, 2f_{CUTOFF}–40 dB) (typical value[*1])

Cutoff Frequency: OFF, 1 MHz, 500 kHz (typical value[*1])

Offset Voltage (when the probe attenuation is set to 1:1)

Measurement Range	Selectable Range	Resolution
100 mV	–0.2 to 0.2 V	0.1 mV
200 mV	–0.4 to 0.4 V	0.2 mV
500 mV	–1 to 1 V	0.5 mV
1 V	–2 to 2 V	1 mV
2 V	–4 to 4 V	2 mV
5 V	–10 to 10 V	5 mV
10 V	–20 to 20 V	10 mV
20 V	–40 to 40 V	20 mV
50 V	–100 to 100 V	50 mV

Offset Accuracy (value measured at an ambient temperature of 23 ± 5°C, ambient humidityof 50 ± 10% RH, after performing offset calibration after the warm-up time has passed, withtime base set to internal clock)

±0.5% of Setting[*3]

Acquisition Mode

Trigger (Normal/Auto)

Memory Length of Acquisition Memory

4 Mwords/CH

Memory Partition

Select from 1, 2, 4, 8, 16, 32, 64, 128, 256, 512, and 1024 partitions

Maximum Sampling Rate

20 MS/s

Time Base Source

Module's internal clock, external clock input, or the time base signal (CMNCLK) of the measuring station (WE bus)

Internal Time Base

50 ns to 1 ms (50-ns steps)

Time Base Accuracy

±50 ppm

Probe Attenuation Settings

1:1, 10:1, 100:1, 1000:1

Trigger Source

Input signal (includes input signals of other linked digitizer modules),
Bus trigger signal of the measuring station (BUSTRG1/BUSTRG2)
External trigger input (EXT. TRG IN)
Commercial power signal used

External Trigger Input

Input Format

Non-isolated, unbalanced (TTL)

Input H Level

2.2 V min

Input L Level

0.5 V max

Input Resistance

10 kΩ (typical value[*1])

Connector Type

BNC

Allowable Input Voltage Range

–3 V to +8 V

Maximum Input Frequency

8 MHz

Minimum Pulse Width

20 ns or more for both H and L

Bus Trigger (BUSTRG1/BUSTRG2) Signal Output Source

The trigger detected from the input signal can be output

Trigger Level

Resolution

0.5% of the Full Scale[*2]

Hysteresis Width

3% or 10% of the Full Scale[*2] (typical value[*1])

Selectable Range

±5% to 95% of the Full Scale[*2]

Trigger Type

Edge trigger or window trigger

Pretrigger Amount

Set in the range from 0 to (the record length – 2)

External Clock Input

Input Format

Non-isolated, unbalanced (TTL)

Input H Level

2.2 V min

Input L Level

0.5 V max

Input Resistance

10 kΩ (typical value[*1])

Connector Type

BNC

Input Frequency Range

10 kHz to 20 MHz (continuous clock only)

Minimum Pulse Width

20 ns or more for both H and L

Skew between Channels (within the same module)

1 ns (typical value[*1])

Skew between Modules (When modules of the same type are linked)

4 ns per module (under the same setup conditions, typical value[*1])

*1 The typical value is a representative or standard value. It is not a warranted value.

*2 Full scale indicates the range from the upper limit to the lower limit of the measurement range.

*3 The accuracy of the measured value when an offset voltage is set is ±(DC accuracy + offset accuracy)

4.2 Default Values (Factory Default Settings)

On (measurement ON/OFF): On (both CH1 and CH2)
Coupling (input coupling): DC (both CH1 and CH2)
Range (measurement range): 1 V (both CH1 and CH2)
Offset (DC offset): 0 V (both CH1 and CH2)
Filter (input filter): Off (both CH1 and CH2)
Probe (probe attenuation): 1:1 (both CH1 and CH2)
Sampling Interval: 50 ns
Memory Partition: 1
Record Length: 1000
No. of Acquisitions: 1
Time Base: Internal
Trigger Mode: Auto
Trig Type: Rise
Hysteresis: 3%
Trig Level: 0 V
Trig Source: Slot1-CH1
Upper Level (of window trigger): 0.05 V
Lower Level (of window trigger): –0.05 V
Pretrigger: 0
Hold Off: 1000
Repeat (repetitive measurement): On

4.3 General Specifications

Safety Standards

Complies with CSA C22.2 No.1010.1 and EN61010-1, conforms to JIS C1010-1

- Overvoltage Category CAT I and II[*1]
- Pollution Degree 1 and 2[*2]

[*1] Overvoltage Categories define transient overvoltage levels, including impulse withstand voltage levels.

Overvoltage Category I: Applies to equipment supplied with electricity from a circuit containing an overvoltage control device.
Overvoltage Category II: Applies to equipment supplied with electricity from fixed installations like a distribution board.

[*2] Pollution Degree: Applies to the degree of adhesion of a solid, liquid, or gas which deteriorates withstand voltage or surface resistivity.

Pollution Degree 1: Applies to closed atmospheres (with no, or only dry, non-conductive pollution).
Pollution Degree 2: Applies to normal indoor atmospheres (with only non-conductive pollution).

EMC Standard

Emission

Complying Standard

EN55011 Group 1 Class A

This product is a Class A (for commercial environment) product. Operation of this product in a residential area may cause radio interference in which case the user is required to correct the interference.

Immunity

Complying Standard

EN61326 Industrial Environment

Maximum Measuring Input Cable Length

30 m

Standard Operating Conditions

Ambient temperature: 23°C ± 5°C
Ambient humidity: 50 ± 10% RH
Supply voltage/frequency error: Within 1% of rating
After warm-up time has passed

Warm-up Time

At least 30 minutes

Maximum Allowable Input Voltage

Measurement input (CH1/CH2): 250 V (DC + ACpeak) or 177 Vrms
External clock input: –3 V to +8 V
External trigger input: –3 V to +8 V
(Overvoltage Category CAT I and II)

Operating Conditions

Same as those of the measuring station

Storage Conditions

Temperature: –20 °C to 60 °C
Humidity: 20% to 80% RH (no condensation)

Power Consumption

10 VA (typical value* at 100 V/50 Hz)

Weight

Approx. 0.7 kg

External Dimensions

Approx. 33(W) × 243(H) × 232(D) mm (projections excluded)

Number of Used Slots

1

Standard Accessories

User's Manual (this manual) (1)

* The typical value is a representative or standard value. It is not a warranted value.

4.4 Dimensional Drawings

Unit: mm

WE7116 2-CH, 20 MS/s Digitizer Module

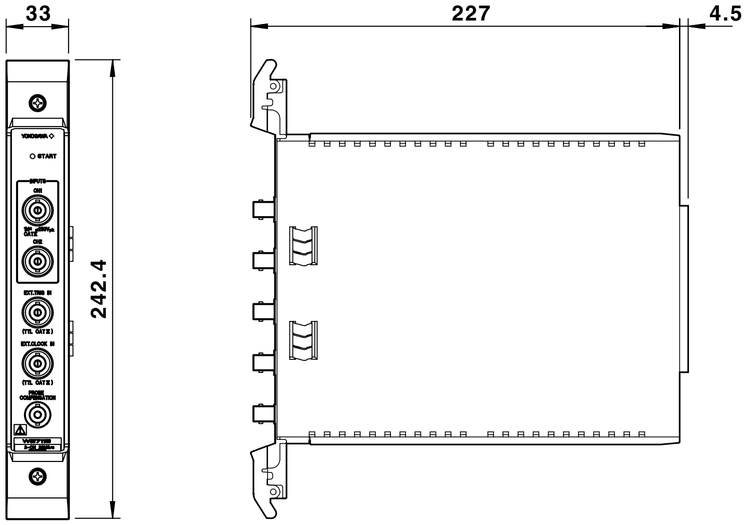
33
227
4.5
242.4
YOKOGAWA
START
INPUTS
CH1
CH2
EXT.TRIG IN
(TTL CAT II)
EXT.CLOCK IN
(TTL CAT II)
PROBE COMPENSATION
WE7116

If not specified, the tolerance is ±3%. However, in cases of less than 10 mm, the tolerance is ±0.3 mm.

Index

Symbols

*.csv 1-7
*.wvf 1-7

A

AC 1-3

B

Both 1-6
BUSCLK 1-5
BUSTRG 1-6

C

clock signal 2-3
Coupling 1-3
Cyclic 1-7

D

DC 1-3

E

Enter 1-6
Exit 1-6
EXT.CLOCK IN 1-5, 1-8, 2-3
EXT.TRIG IN 1-6, 1-8, 2-4
external clock input terminal 1-8, 2-3
external trigger input terminal 1-8, 2-4
EXTTRG 1-6

F

Fall 1-6
file conversion 1-7
File number limit 1-7
Filter 1-5

H

hysteresis 1-6

I

input 2-3
input terminal 1-8
Internal 1-5

L

Line 1-6
Lower Level 1-6

M

measurement channel, turning ON/OFF 1-3
Measurement range 1-3
Memory Partition 1-4
module, installation of 2-1

N

No. of acquisitions 1-4

O

Offset 1-4
offset CAL 1-5
offset voltage 1-4
On 1-3

P

package, contents of 2
Pretrigger 1-6
Probe Attenuation 1-4
PROBE COMPENSATION 1-8, 2-5
probe compensation signal output terminal 1-8

R

Range 1-3
Record Length 1-4
Repeat 1-3
Rise 1-6

S

sampling indicator 1-8
Sampling Interval 1-4
scale conversion 1-7
self test 3-2
SlotX-CHY 1-6

T

Time Base 1-5
Trig Type 1-6
Trigger Hold Off 1-6
trigger level, setting of 1-6
trigger signal 2-4
trigger source, selection of 1-6
trigger type, selection of 1-6
Troubleshooting 3-1

U

Upper Level 1-6

W

waveform data, automatic saving of 1-7
window trigger 1-6